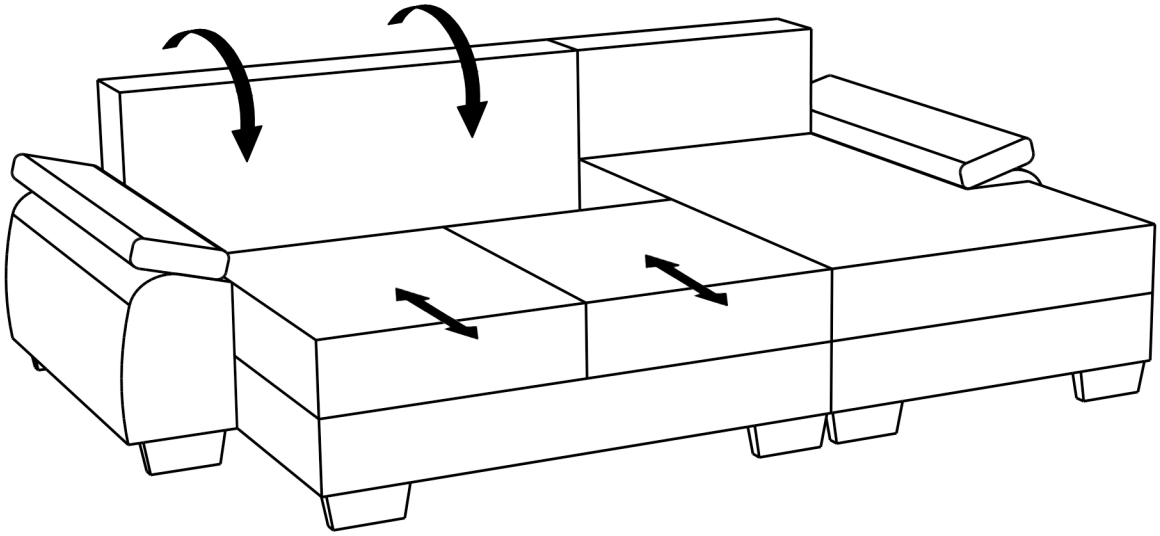

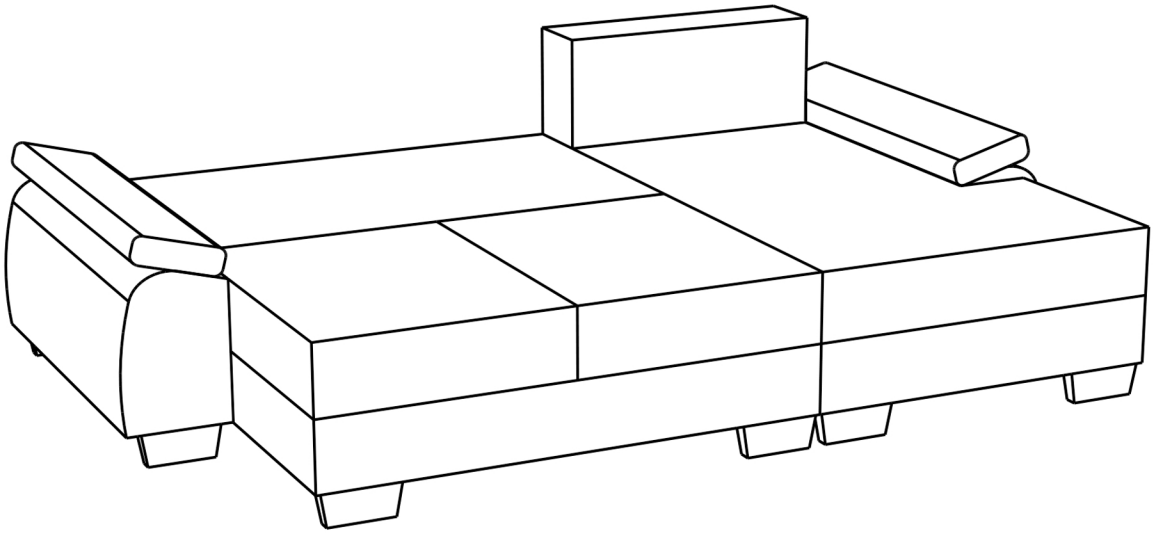

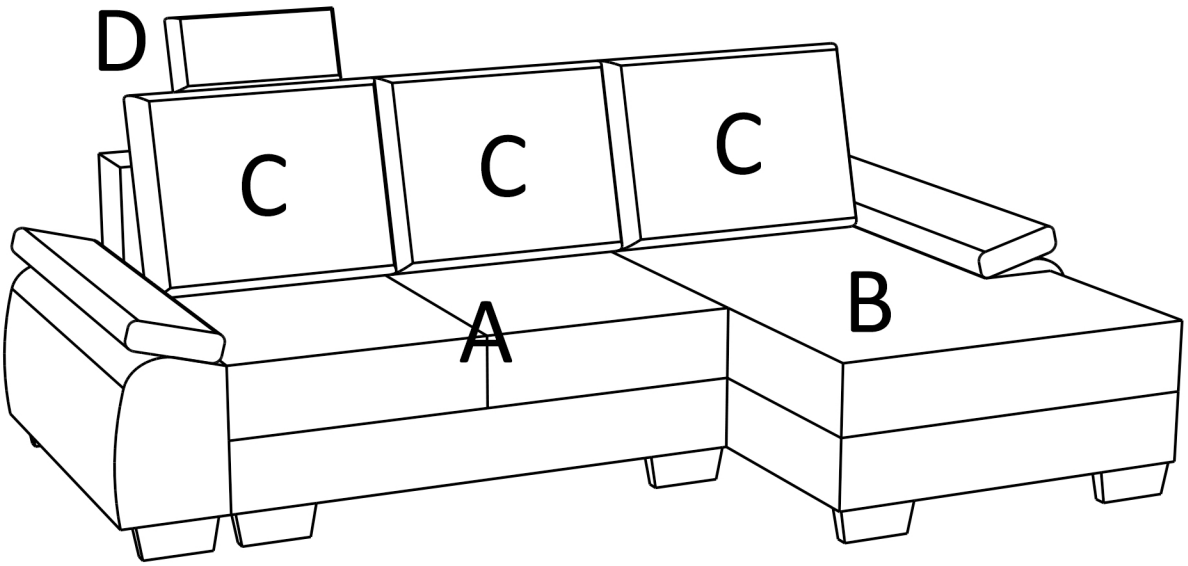
D
C
C
C
A
B